WIRING DIAGRAM

Split System Air Conditioner (Outdoor Section) With ECM Outdoor Motor

208/230V

Single Phase / 60 Hz.

NOTES:

1. Disconnect all power before servicing.
2. For supply connections use copper conductors only.
3. Not suitable on systems that exceed 150 volts to ground.
4. For replacement wires use conductors suitable for 105 °C.
5. For ampacities and overcurrent protection, see unit rating plate.
6. Connect to 24 vac/40va/class 2 circuit. See furnace/air handler installation instructions for control circuit and optional relay/transformer kits.
7. Anti-Short Cycle Timer (ASCT) may or may not be installed in the unit. If desired, ASCT is factory installed on select models only or may be field installed as shown using manufacturer's approved kit. If not present, connect Yellow and Black wires per Note 6.

1. Couper le courant avant de faire letretien.
2. Employez uniquement des conducteurs en cuivre.
3. Ne convient pas aux installations de plus de 150 volt a la terre.

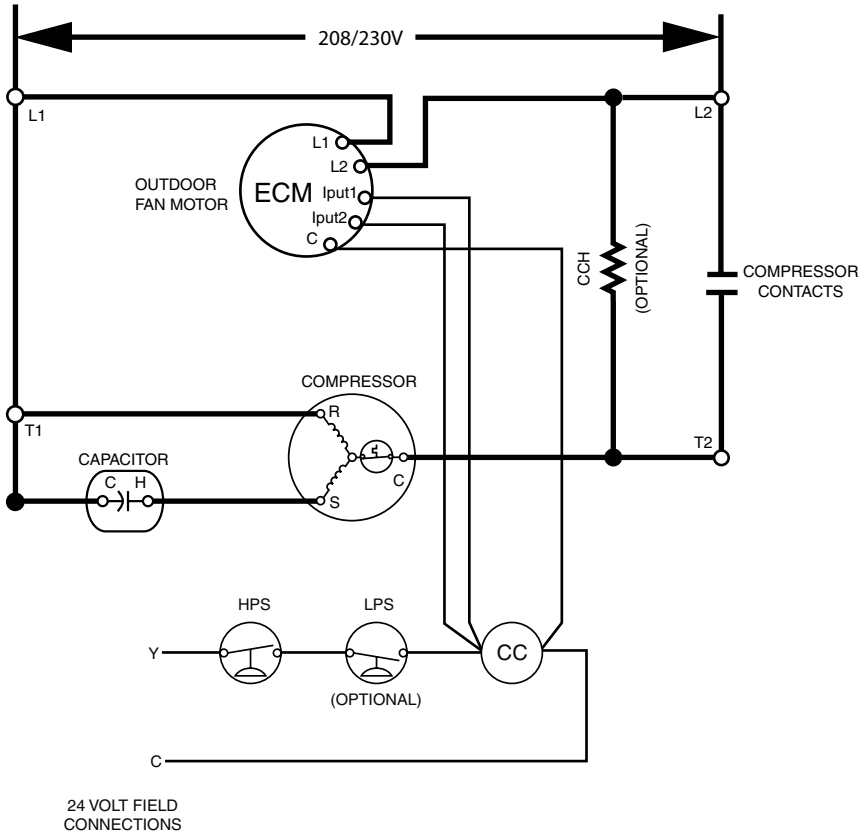

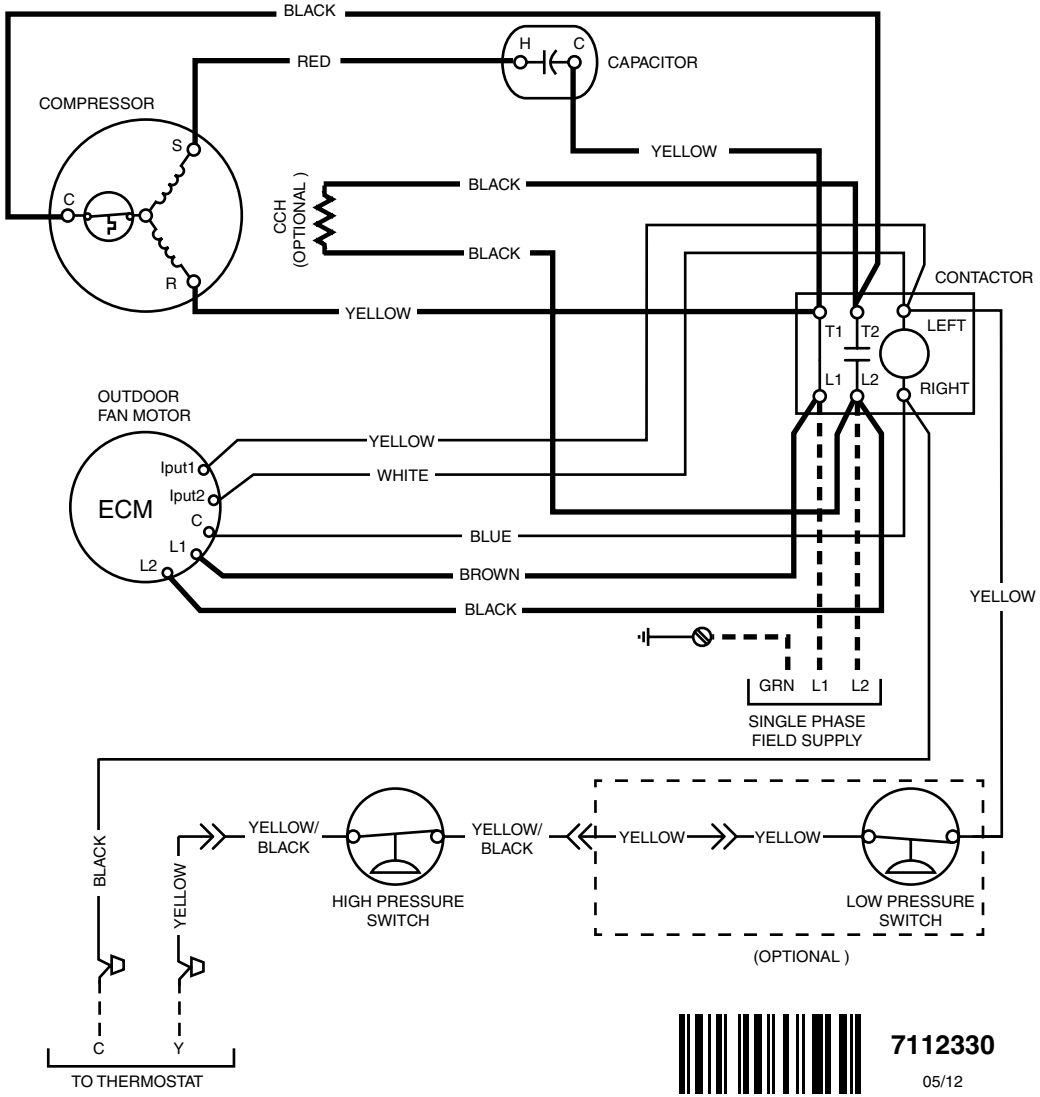

LEGEND:

FIELD WIRING	- - - -
LOW VOLTAGE	———
HIGH VOLTAGE	━━━

CC- CONTACTOR COIL
CCH - CRANKCASE HEATER
LPS - LOW PRESSURE SWITCH
HPS - HIGH PRESSURE SWITCH

7112330

05/12